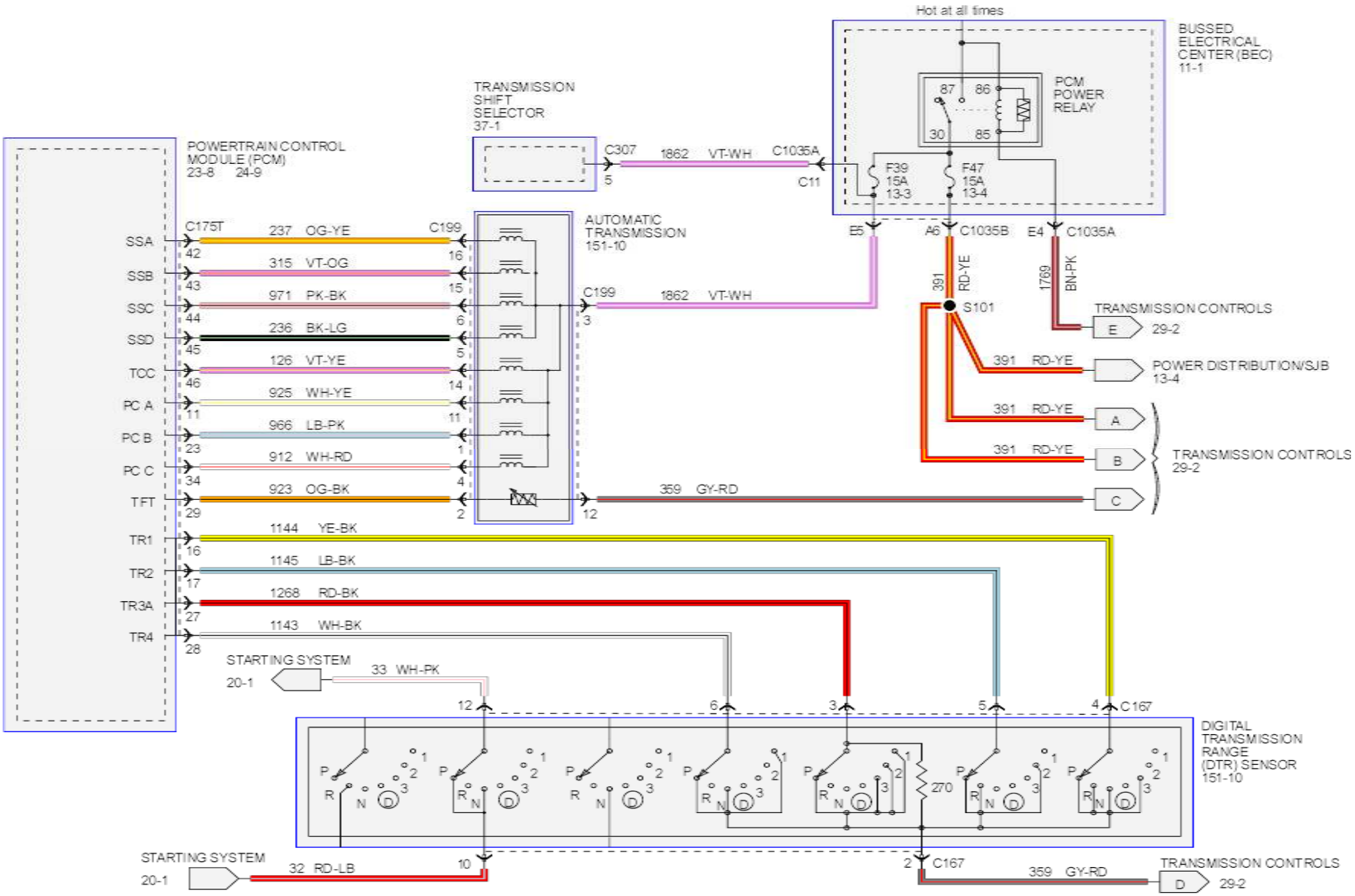
Hot at all times
BUSSED ELECTRICAL CENTER (BEC) 11-1
PCM POWER RELAY
87
86
30
85
TRANSMISSION SHIFT SELECTOR 37-1
C307
5
1862 VT-WH
C1035A
C11
F39 15A 13-3
F47 15A 13-4
POWERTRAIN CONTROL MODULE (PCM) 23-8 24-9
C175T
SSA
SSB
SSC
SSD
TCC
PC A
PC B
PC C
TFT
TR1
TR2
TR3A
TR4
237 OG-YE
315 VT-OG
971 PK-BK
236 BK-LG
126 VT-YE
925 WH-YE
966 LB-PK
912 WH-RD
923 OG-BK
C199
AUTOMATIC TRANSMISSION 151-10
C199
1862 VT-WH
E5
A6
C1035B
E4
C1035A
391 RD-YE
1769 BN-PK
S101
TRANSMISSION CONTROLS
E
29-2
391 RD-YE
POWER DISTRIBUTION/SJB 13-4
391 RD-YE
A
391 RD-YE
B
TRANSMISSION CONTROLS 29-2
C
359 GY-RD
1144 YE-BK
1145 LB-BK
1268 RD-BK
1143 WH-BK
STARTING SYSTEM 20-1
33 WH-PK
C167
DIGITAL TRANSMISSION RANGE (DTR) SENSOR 151-10
270
STARTING SYSTEM 20-1
32 RD-LB
C167
359 GY-RD
TRANSMISSION CONTROLS
D
29-2

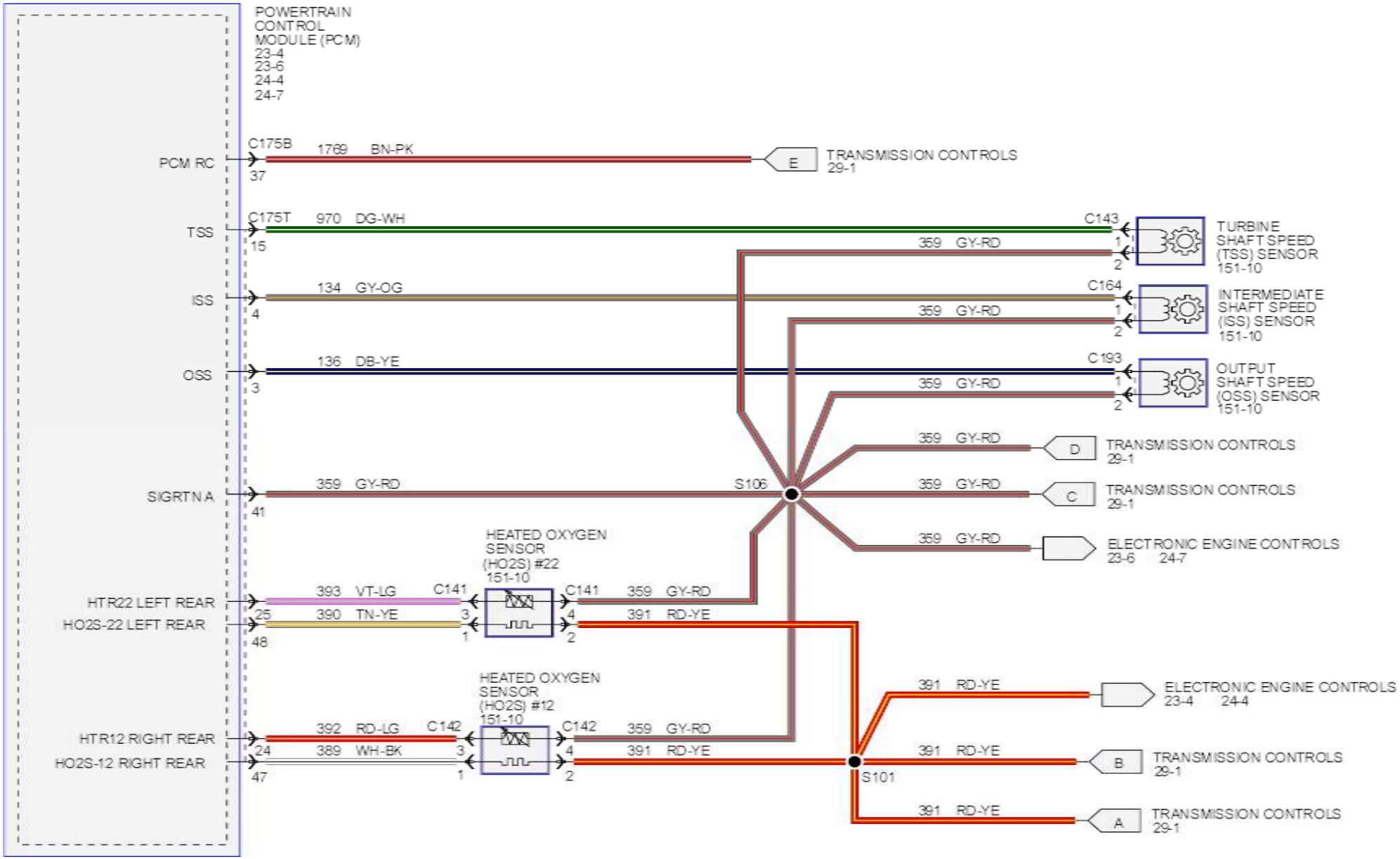
POWERTRAIN CONTROL MODULE (PCM)
23-4
23-6
24-4
24-7
PCM RC
C175B
37
1769 BN-PK
E
TRANSMISSION CONTROLS
29-1
TSS
C175T
15
970 DG-WH
C143
1
2
TURBINE SHAFT SPEED (TSS) SENSOR
151-10
359 GY-RD
ISS
4
134 GY-OG
C164
INTERMEDIATE SHAFT SPEED (ISS) SENSOR
151-10
OSS
3
136 DB-YE
C193
OUTPUT SHAFT SPEED (OSS) SENSOR
151-10
D
TRANSMISSION CONTROLS
29-1
SIGRTN A
41
359 GY-RD
S106
C
TRANSMISSION CONTROLS
29-1
ELECTRONIC ENGINE CONTROLS
23-6 24-7
HEATED OXYGEN SENSOR (HO2S) #22
151-10
HTR22 LEFT REAR
25
393 VT-LG
C141
HO2S-22 LEFT REAR
48
390 TN-YE
391 RD-YE
HEATED OXYGEN SENSOR (HO2S) #12
151-10
HTR12 RIGHT REAR
24
392 RD-LG
C142
HO2S-12 RIGHT REAR
47
389 WH-BK
S101
ELECTRONIC ENGINE CONTROLS
23-4 24-4
B
TRANSMISSION CONTROLS
29-1
A
TRANSMISSION CONTROLS
29-1